HYLOAD®
Keeping the elements out.®

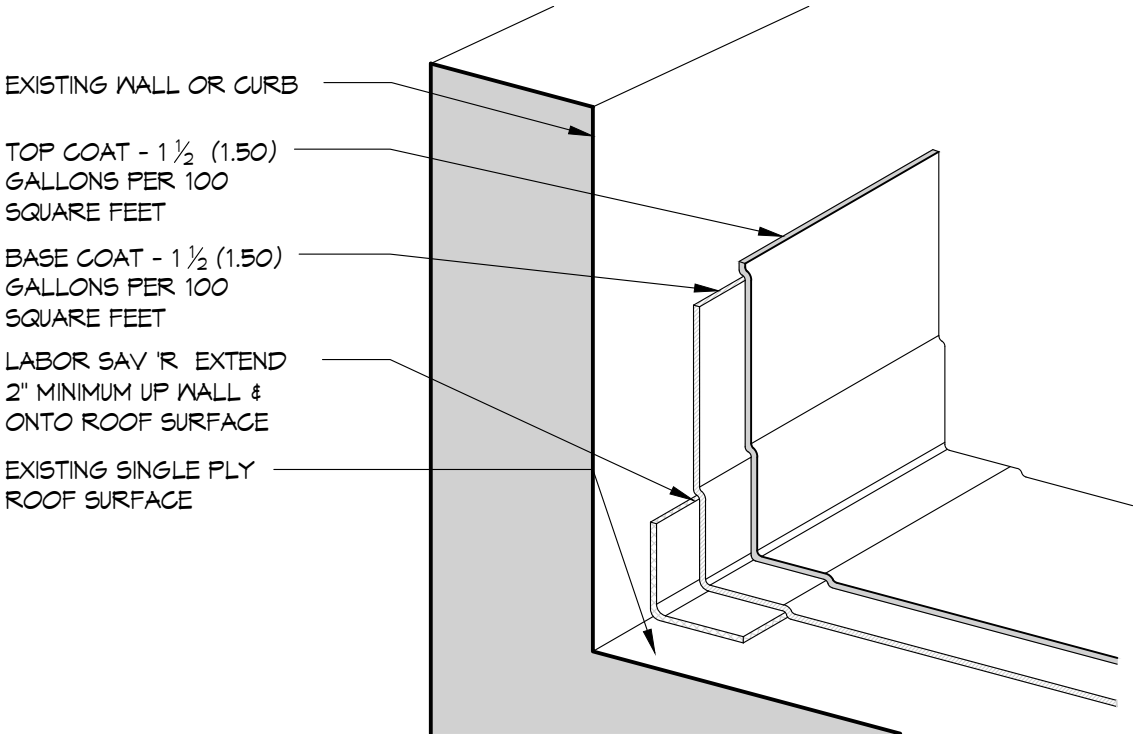

TPO, PVC, Hypalon, Kee, and Fibertite Membrane Systems

HyKOTE™
Elastomeric Roofing & Waterproofing

CORPORATE HEADQUARTERS

5020 ENTERPRISE PARKWAY
SEVILLE, OHIO 44273
PHONE: (800) 457-4056
FAX: (330) 769-4153

HYKOTE APPLICATION AT CURB AND/OR WALL

Detail for Application on Existing Single Ply Roofing Systems

DWG NO.
HK SP001