HYLOAD®
Keeping the elements out.®

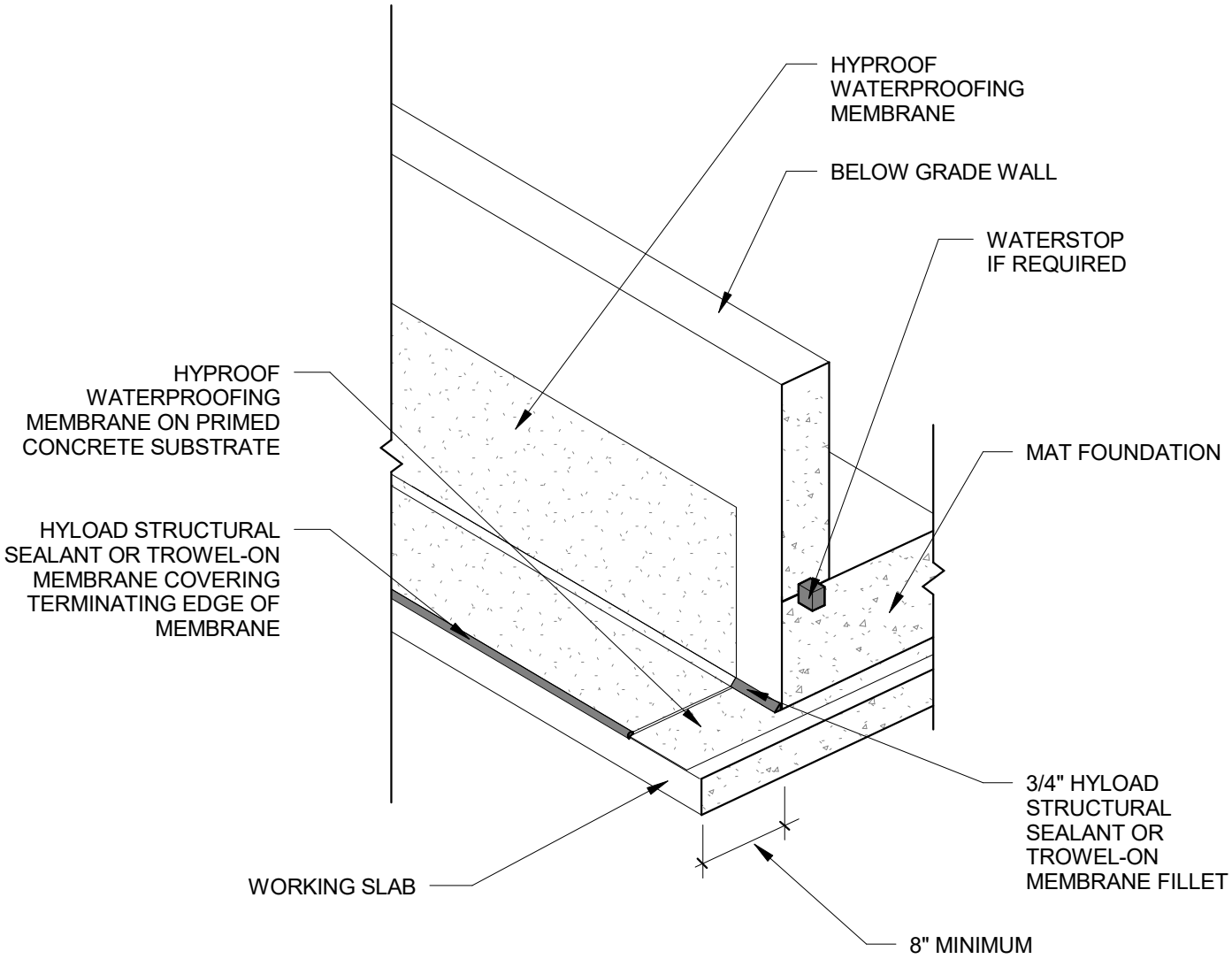

HyDAM™
Dynamic Aqua Barrier Membrane System

5020 Enterprise Parkway
Seville, Ohio 44273
Phone: (800) 457-4056

Title: BELOW GRADE WALL AT EDGE OF MAT SLAB FOUNDATION OVER WORKING SLAB

Detail Number: WP02