HYLOAD®
Keeping the elements out.®

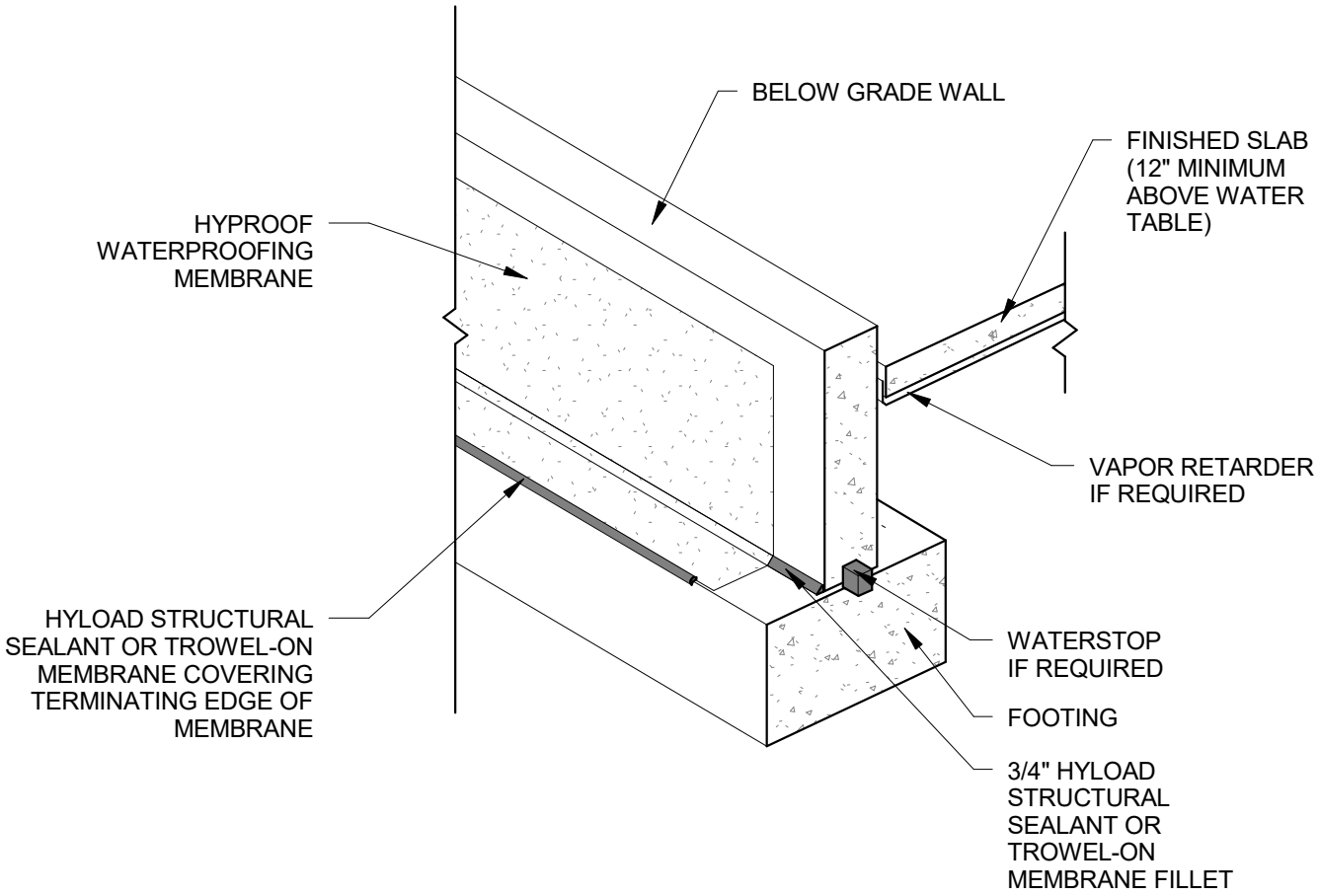


HyDAM™
Dynamic Aqua Barrier Membrane System

5020 Enterprise Parkway
Seville, Ohio 44273
Phone: (800) 457-4056

Title: BELOW GRADE WALL ON FOOTING WITH INTERIOR FLOOR SLAB ELEVATED ABOVE FOOTING

Detail Number: WP06